Technical Data

Y.TU 160-D04

# YXLON.TU 160-D04
# End Grounded Metal-Ceramic X-Ray Tube

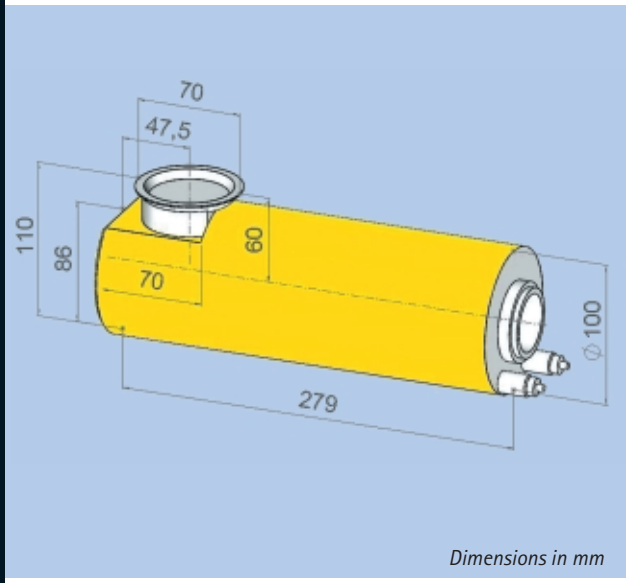


*Dimensions in mm*

From plastics to light alloys and up to steel, end grounded metal-ceramic X-ray tubes from YXLON International cover a wide inspection range.

TU 160-D04 is especially suited for radioscopy.

Two focal spots of the same size serve for long lifetime of the tube.

Providing a high level of mechanical and electrical strength YXLON X-ray tubes are both compact and lightweight.

Together with the YXLON generators, power supplies and control units the X-ray tubes form powerful systems, setting the standards in reliability, lifecycle and service.

*YXLON. The reason why.*

- High Penetration Power
- Long Lifecycle
- High Reliability
- Extensive Service

Y.TU 160-D04

YXLON. The reason why

# Technical Data

## Y.TU 160-D04

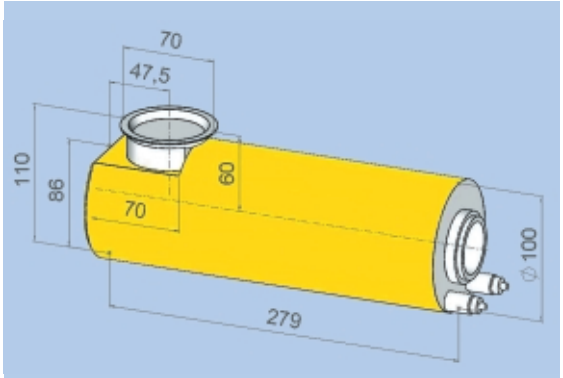


*Dimensions in mm*

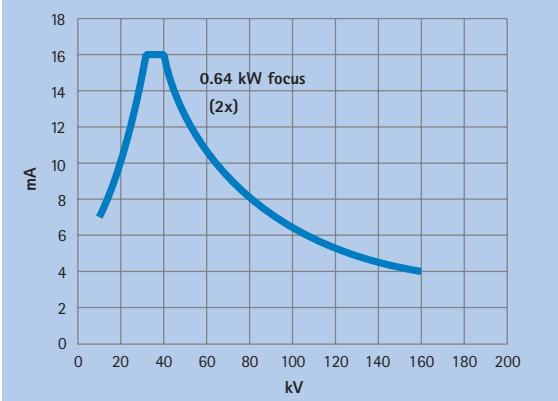


**Loading data:** shown are the max. permissible anode currents. Within the X-ray system these anode currents may be limited by power suppliers or generators.

| | |
|---|---|
| **Max. tube voltage** | 160 kV |
| **Focal spot size** | |
| (acc. EN12543) | 1.0 mm / 1.0 mm |
| (acc. IEC336) | 0.4 / 0.4 |
| **Max. power** | |
| (small / large focus) | 0.64 kW / 0.64 kW |
| **Max. tube current at 160 kV** | 4.0 mA / 4.0 mA |
| **Emergent beam angle** | 40 ° |
| **Inherent filtration**[1] | 0.8 mm Be + 3 mm Al |
| **Leakage radiation**[2] | < 2.5 mSv/h |
| **Coolant** | Water |
| Max. inlet temperature | 45 °C |
| Min. flow rate | 4 l/min |
| **Enviromental Conditions** | |
| Operation temperature | -10 °C...+40°C |
| Storage temperature | -25 °C...+70°C |
| Relative humidity | |
| - Operation | 90 % |
| - Storage | 95 % |
| **Weight** | 8 kg |
| **H.V. connection**[3] | Flange R12 |
| **Approval** | PTB |
| **Order No.** | 9421 172 30403 |

[1] Al-filter removable by using tools;
Al-filter acc. DIN 54113 and SSI FS1989:2

[2] Measured at 1.0 m distance from the focal spot with X-ray port closed and X-ray tube operating at full load.

[3] Quick-lock adapter available

Data subject to change without notice. Printed in Germany. 9499.211.143.10EI01

YXLON International X-Ray GmbH,
Essener Bogen 15, D-22419 Hamburg, Phone: +49 40 527 29 - 0,
Fax: +49 40 527 29 -170, E-mail: yxlon@hbg.yxlon.com, http://www.yxlon.com