Technical Data

Y.TU 160-D02

YXLON.TU 160-D02
End Grounded Metal-Ceramic X-Ray Tube

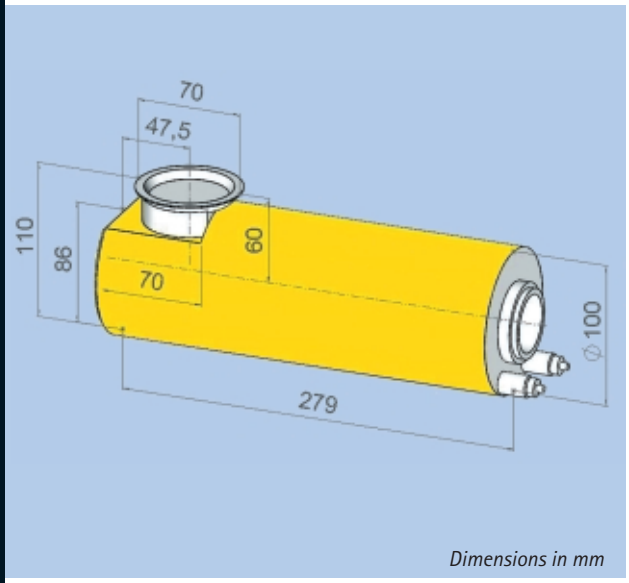

Dimensions in mm

From plastics to light alloys and up to steel, end grounded metal-ceramic X-ray tubes from YXLON International cover a wide inspection range.

Y.TU 160-D02 features high penetration power and is suited for a wide variety of standard applications in radiography and radioscopy.

Providing a high level of mechanical and electrical strength YXLON X-ray tubes are both compact and lightweight.

Together with the YXLON generators, power supplies and control units the X-ray tubes form powerful systems, setting the standards in reliability, lifecycle and service.

YXLON. The reason why.

- **High Penetration Power**
- **Long Lifecycle**
- **High Reliability**
- **Extensive Service**

Y.TU 160-D02

Technical Data

Y.TU 160-D02

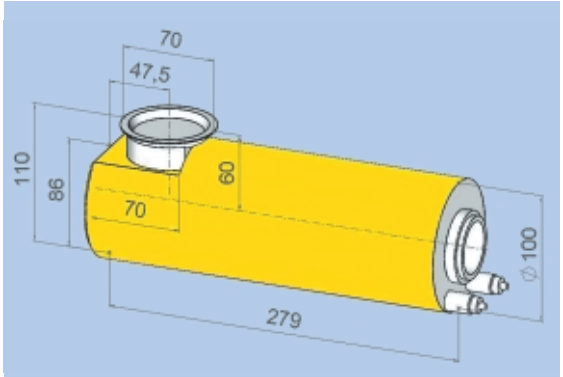

Dimensions in mm

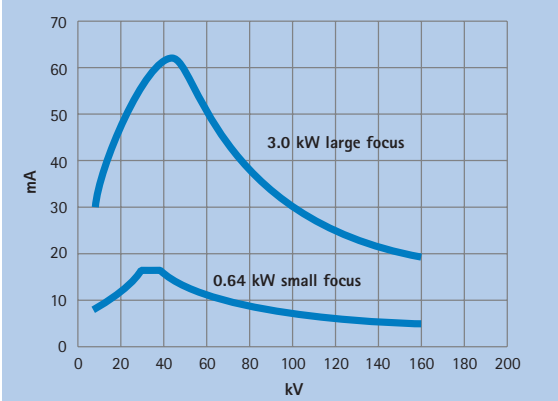

Loading data: shown are the max. permissible anode currents. Within the X-ray system these anode currents may be limited by power suppliers or generators.

Max. tube voltage	160 kV
Focal spot size	
(acc. EN12543)	1.0 mm / 5.5 mm
(acc. IEC336)	0.4 / 3.0
Max. power	
(small / large focus)	0.64 kW / 3.0 kW
Max. tube current at 160 kV	4.0 mA / 19.0 mA
Emergent beam angle	40 °
Inherent filtration[1]	0.8 mm Be + 3 mm Al
Leakage radiation[2]	< 2.5 mSv/h
Coolant	Water
Max. inlet temperature	45 °C
Min. flow rate	4 l/min
Enviromental Conditions	
Operation temperature	-10 °C...+40°C
Storage temperature	-25 °C...+70°C
Relative humidity	
- Operation	90 %
- Storage	95 %
Weight	8 kg
H.V. connection[3]	Flange R12
Approval	PTB
Order No.	9421 172 30203

[1] Al-filter removable by using tools;
Al-filter acc. DIN 54113 and SSI FS1989:2

[2] Measured at 1.0 m distance from the focal spot with X-ray port closed and X-ray tube operating at full load.

[3] Quick-lock adapter available

Änderungen vorbehalten. Printed in Germany. 9499.211.140.10EH01

YXLON International X-Ray GmbH,
Essener Bogen 15, D-22419 Hamburg, Phone: +49 40 527 29 - 0,
Fax: +49 40 527 29 -170, E-mail: yxlon@hbg.yxlon.com, http://www.yxlon.com