Technical Data

Y.TU 100-D02

YXLON.TU 100-D02
End Grounded Metal-Ceramic X-Ray Tube

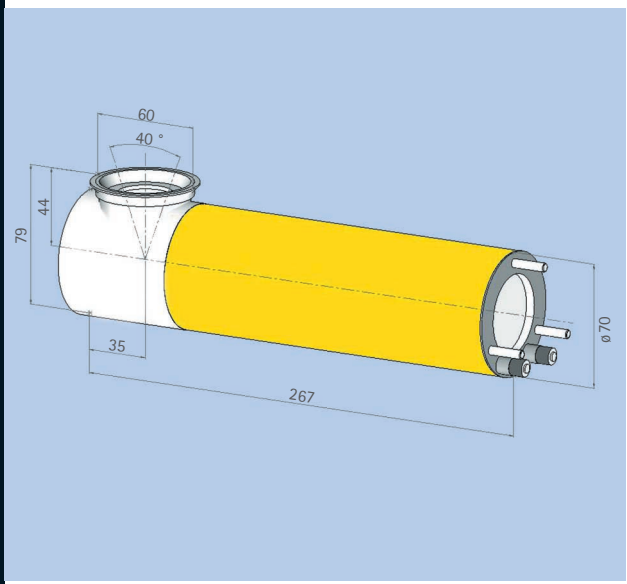

From plastics to light alloys and up to steel, end grounded metal-ceramic X-ray tubes from YXLON International cover a wide inspection range.

The Y.TU 100-D02 is YXLON's smallest and lightest X-ray tube, and with a diameter of only 70 mm, it is ideal for inspections in confined spaces.

Providing a high level of mechanical and electrical strength YXLON X-ray tubes are both compact and lightweight.

Together with the YXLON generators, power supplies and control units the X-ray tubes form powerful systems, setting the standards in reliability, lifecycle and service.

YXLON. The reason why.

- **High Penetration Power**
- **Long Lifecycle**
- **High Reliability**
- **Extensive Service**

Y.TU 100-D02

Technical Data

Y.TU 100-D02

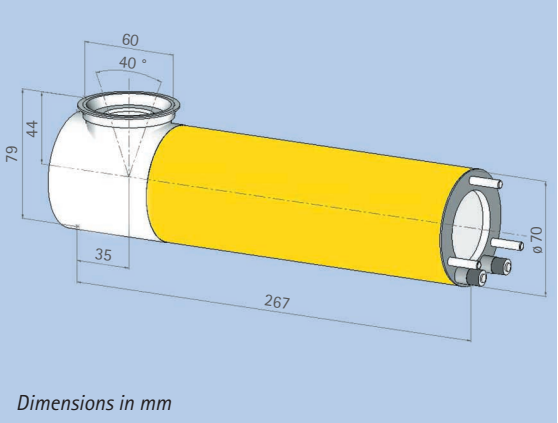

Dimensions in mm

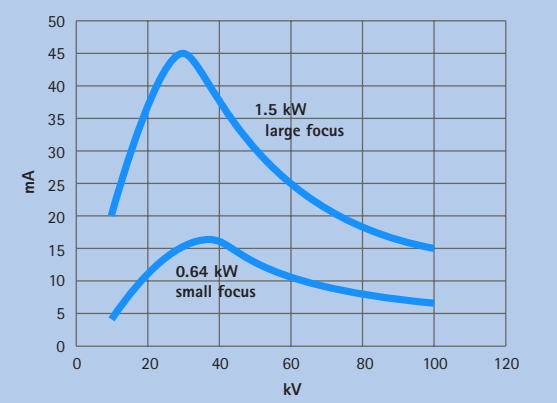

Loading data: shown are the max. permissible anode currents. Within the X-ray system these anode currents may be limited by power suppliers or generators.

Max. tube voltage	100 kV
Focal spot size (acc. EN12543)	1.0 mm / 3.0 mm
Max. power (small / large focus)	0.64 kW / 1.5 kW
Max. tube current at 100 kV	6.4 mA / 15 mA
Emergent beam angle	40 °
Inherent filtration[1]	1.0 mm Be + 2 mm Al
Leakage radiation[2]	< 1.0 mSv/h
Coolant	Water
Max. inlet temperature	45 °C
Min. flow rate	4 l/min @ 3 bar
Enviromental Conditions	
Operation temperature	-10 °C...+45 °C
Storage temperature	-25 °C...+70 °C
Relative humidity	
- Operation	90 %
- Storage	95 %
Weight	approx. 6 kg
H.V. connection[3]	Flange R24
Approval	in preparation
Order No.	9421 172 50103

[1] Al-filter movable with rotating cap over the X-ray port; Al-filter acc. DIN 54113 and SSI FS1989:2

[2] Measured at 1.0 m distance from the focal spot with X-ray port closed and X-ray tube operating at full load. X-ray port can be closed with 3 mm Pb-filter in the rotating cap.

[3] Cable flange inclusive

Data subject to change without notice. Printed in Germany. 9499.211.16210.FD01

YXLON International X-Ray GmbH,
Essener Bogen 15, D-22419 Hamburg, Phone: +49 40 527 29 - 0,
Fax: +49 40 527 29 -170, E-mail: yxlon@hbg.yxlon.com, http://www.yxlon.com